TEAR SHEET



Amantani Medium Sculpted Form Table Lamp

Item # KW 3683PRW-L

Designer: Kelly Wearstler

Height: 23"
Width: 22"
Base: 9.5" x 17.5" Decorative
Finishes: PRW, SBM
Shade Treatments: L
Shade Details: 22" x 22" x 11.75" Decorative
Socket: E26 Dimmer
Wattage: 15 LED A19
Weight: 25 Pounds
Note: Reactive Ceramic Glazes Will Vary in Color and Texture

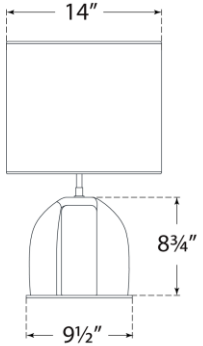

Side View

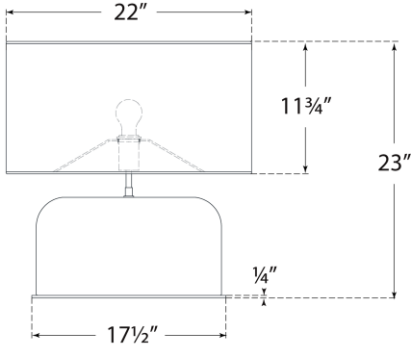

Front View

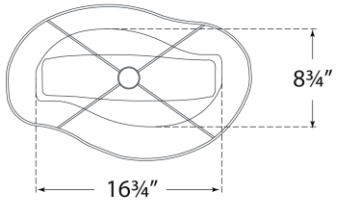

Top View

VISUAL COMFORT & CO.