TEAR SHEET



Precision 17" Flush Mount

Item # KW 4094AB-WG

Designer: Kelly Wearstler

Height: 17.75"
Width: 17"
Canopy: 9" Round
Finishes: AB, AB/BZ, BZ, PN
Glass Options: WG
Lightsource: Dedicated LED
Wattage: 25w (3000lm)
Weight: 18 Pounds

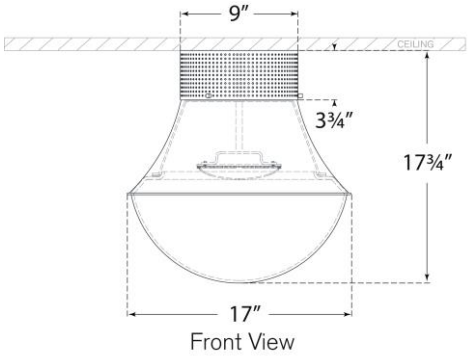

Front View

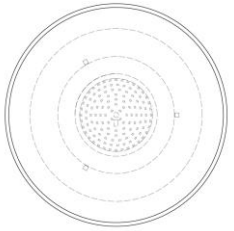
Bottom View

VISUAL COMFORT & CO.