TEAR SHEET

Differo 40" Layered Ring Chandelier

Item # KW 5061AI



Designer: Kelly Wearstler

O/A Height: 11.75" - 240.75"

Fixture Height: 6.25"

Width: 40"

Canopy: 6" Round

Finishes: AI, G

Lightsource: Dedicated LED

Wattage: 75w (10500lm)

Weight: 30 Pounds

Note: 120V Configuration Only | Assembly Required | Height Not Adjustable After Installation

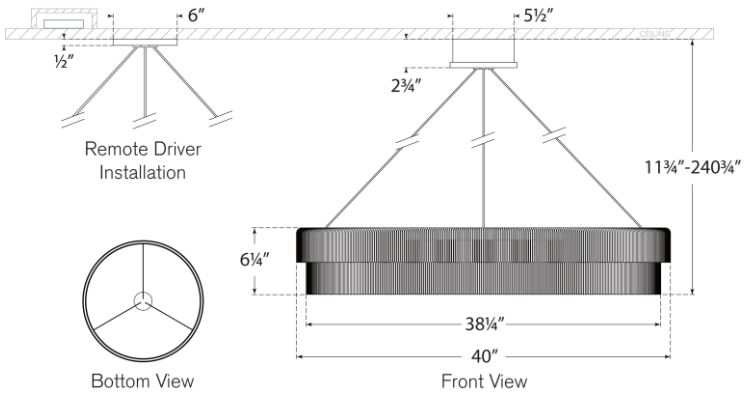

VISUAL COMFORT & CO.

DAMP LED 4