TEAR SHEET



Appareil Small Lantern

Item # KW 5702BZ

Designer: Kelly Wearstler

O/A Height: 61.75"
Fixture Height: 26.25"
Min. Custom Height: 33"
Width: 6"
Canopy: 4.75" Round
Finishes: AB, BZ, PN
Socket: Dedicated LED
Wattage: 35w (2800lm)
Weight: 10 Pounds
Note: Custom Height Available

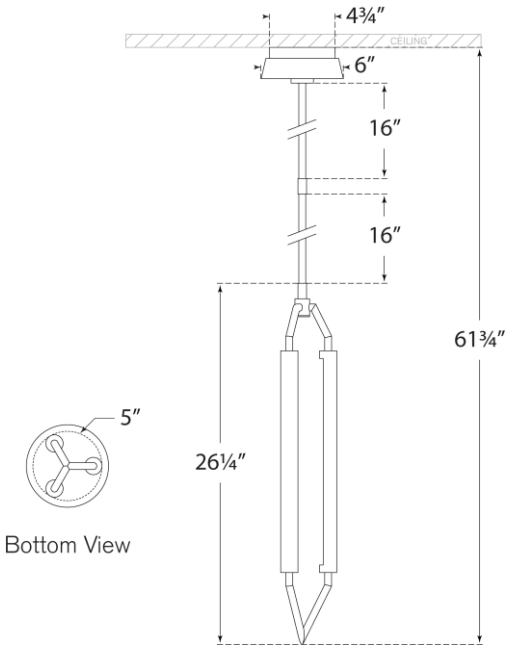

Bottom View

Side View

VISUAL COMFORT & CO.