TEAR SHEET



Axis 24" Linear Pendant

Item # KW 5728AB

Designer: Kelly Wearstler

O/A Height: 50.5"
Fixture Height: 9"
Min. Custom Height: 15.25"
Width: 24"
Canopy: 4.5" Square
Finishes: AB, BZ, PN
Lightsource: Dedicated LED
Wattage: 18w (2100lm)
Weight: 5 Pounds
Note: Custom Height Available

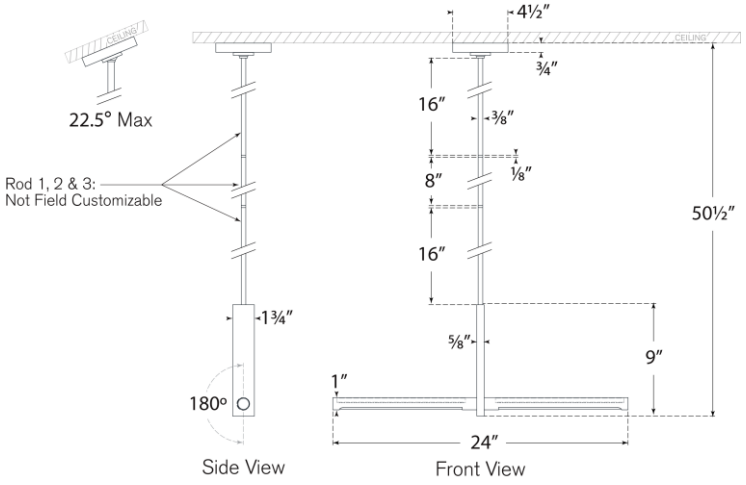

VISUAL COMFORT & CO.

DAMP LED 4