TEAR SHEET

Percy 14" Single Bath Sconce

Item # MF 2000SB-WG

Designer: Marie Flanigan

Height: 14.25"
Width: 3.5"
Extension: 5.25"
Backplate: 4.25" Round
Finishes: BZ, PN, SB
Glass Options: WG
Lightsource: Dedicated LED
Wattage: 12w (1400lm)
Weight: 5 Pounds



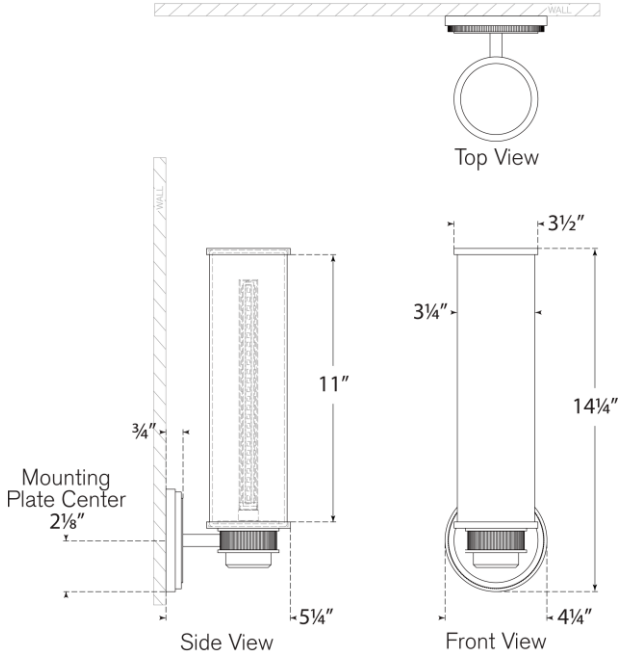

VISUAL COMFORT & CO.

DAMP LED 4