TEAR SHEET



Quinn 28" Chandelier

Item # MF 5210PWT-MG

Designer: Marie Flanigan

Fixture Height: 35.75"
Min. Custom Height: 34.75"
Width: 28"
Canopy: 5.75" Round
Finishes: PWT, SB
Glass Options: MG
Socket: 6 - E12 Candelabra
Wattage: 6 - 6.5 LED B11
Weight: 32 Pounds
Note: 120V Configuration Only

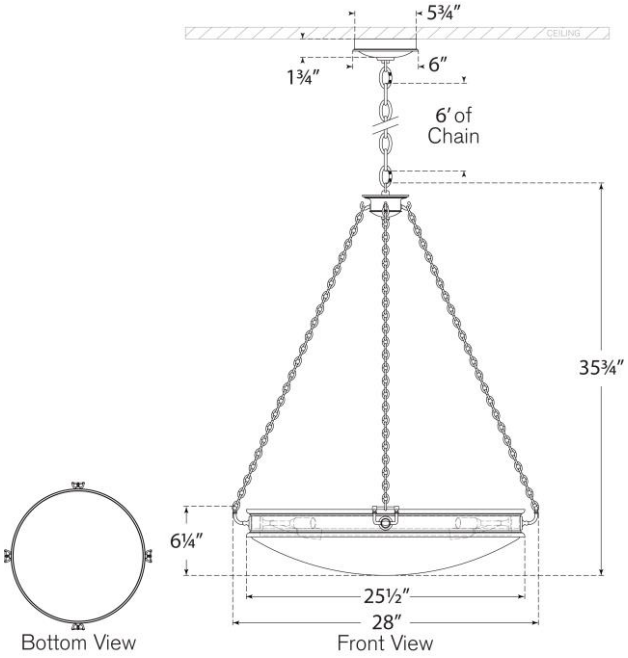

VISUAL COMFORT & CO.