TEAR SHEET

Bellamy 1 Light Statement Chain 8" Globe Chandelier

Item # MF 5400PWT-CG

Designer: Marie Flanigan



Fixture Height: 10.75"
Width: 8"
Canopy: 4.75" Round
Finishes: PWT, SB, SB/BZ
Glass Options: CG, WG
Socket: E26 Keyless
Wattage: 5.5 LED G16.5
Weight: 7 Pounds
Note: 120V Configuration Only | Includes 48" of Chain

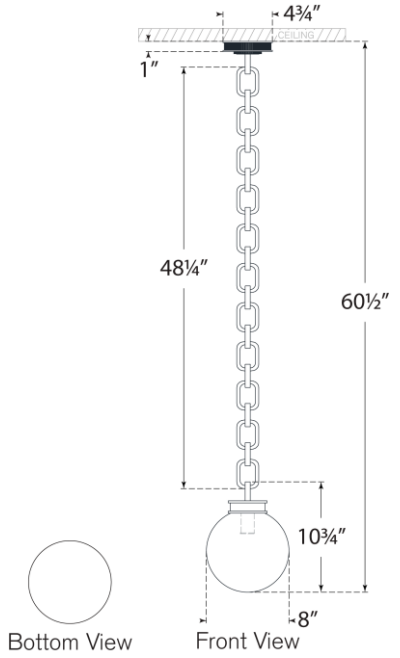

VISUAL COMFORT & CO.