TEAR SHEET



Overture Medium Uplight Linear Chandelier

Item # PB 5046PN-CG

Designer: Peter Bristol

O/A Height: 51.5"
Fixture Height: 13.25"
Min. Custom Height: 19.5"
Width: 41" x 25.25"
Canopy: 6" x 21.75" Round
Finishes: PN
Glass Options: CG
Lightsource: Dedicated LED
Wattage: 25w (2000lm)
Weight: 8 Pounds
Note: Custom Height Available

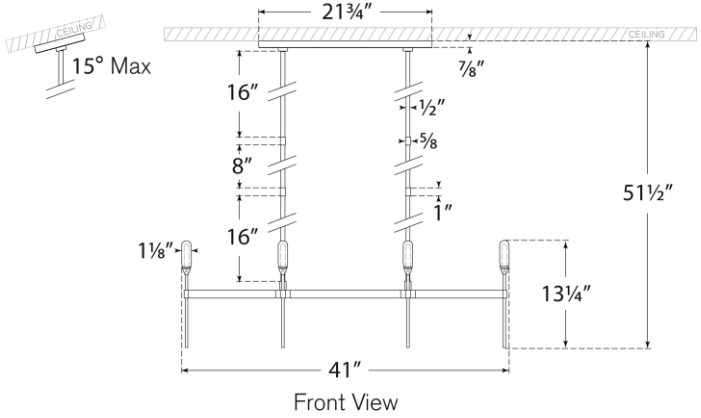

Front View

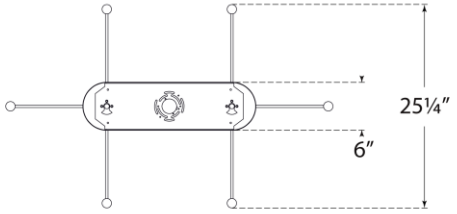

Top View

VISUAL COMFORT & CO.