TEAR SHEET



Concorde Large Table Lamp
Item # PCD 3170BZ-L

Designer: Paloma Contreras

Height: 30.75"
Width: 20"
Base: 8" x 8" Decorative
Finishes: BZ, HAB, PN
Shade Treatments: L
Shade Details: 16" x 20" x 12.75"
Socket: E26 Dimmer
Wattage: 15 LED A19
Weight: 11 Pounds

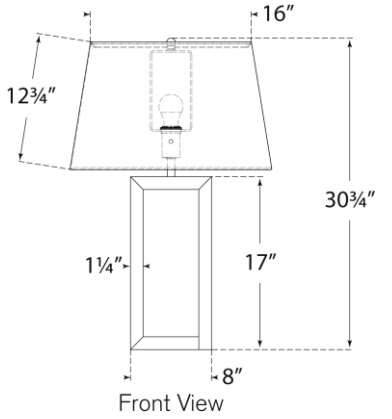

Front View

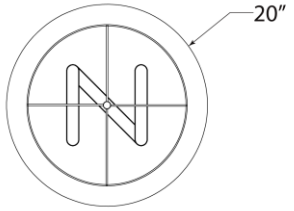

Top View

VISUAL COMFORT & CO.