TEAR SHEET

Comtesse Monopoint Flush Mount

Item # PCD 4120BZ

Designer: Paloma Contreras



Height: 7.5"
Width: 7.5"
Canopy: 4.5" Round
Finishes: BZ, PN
Lightsource: Dedicated LED
Wattage: 12w (1100lm)
Weight: 5 Pounds

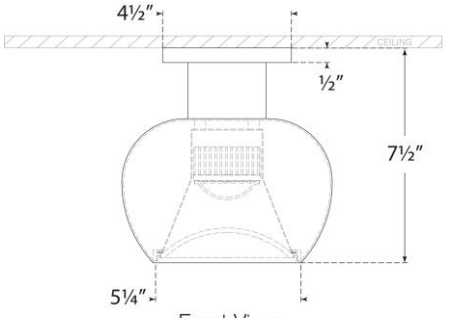

Front View

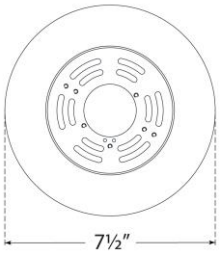

Top View

VISUAL COMFORT & CO.

DAMP LED 4