TEAR SHEET

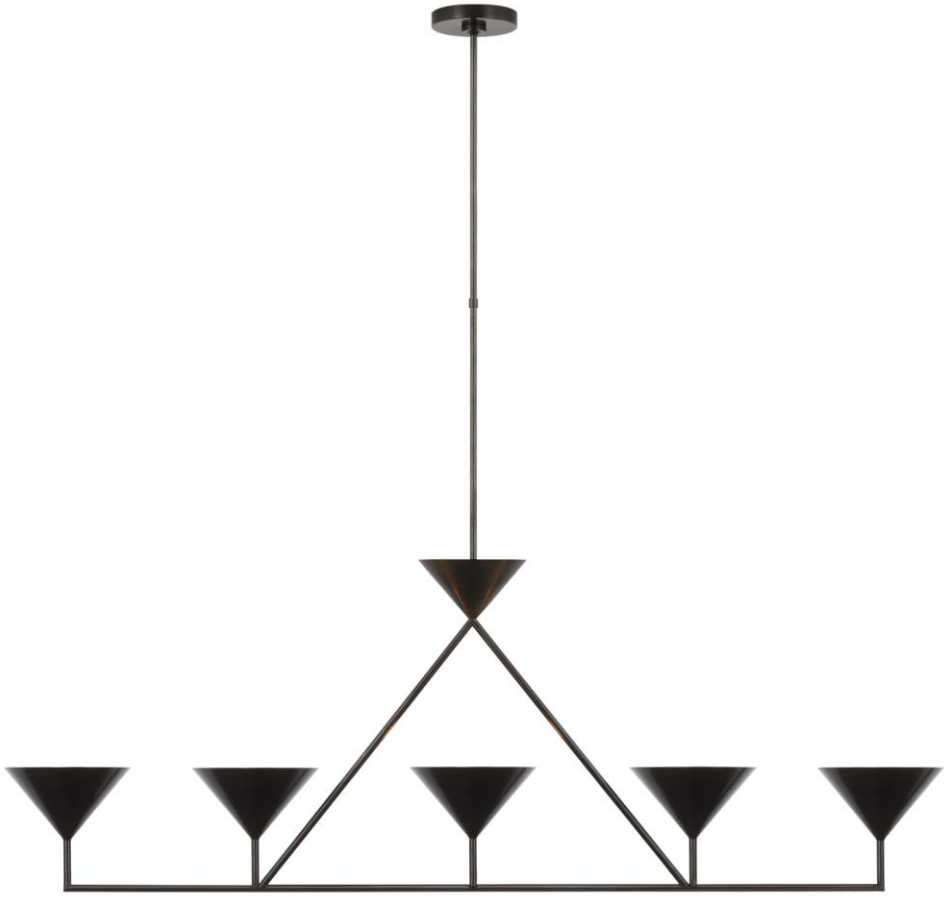

Orsay XL 5-Light Linear Chandelier

Item # PCD 5216BZ

Designer: Paloma Contreras

O/A Height: 63.5"
Fixture Height: 21"
Min. Custom Height: 27.25"
Width: 60.25" x 8.25"
Canopy: 5.5" Round
Finishes: BZ, HAB, PN
Socket: 5 - GU10 Candelabra
Wattage: 5 - 5 LED T7
Weight: 10 Pounds
Note: Bulbs Included

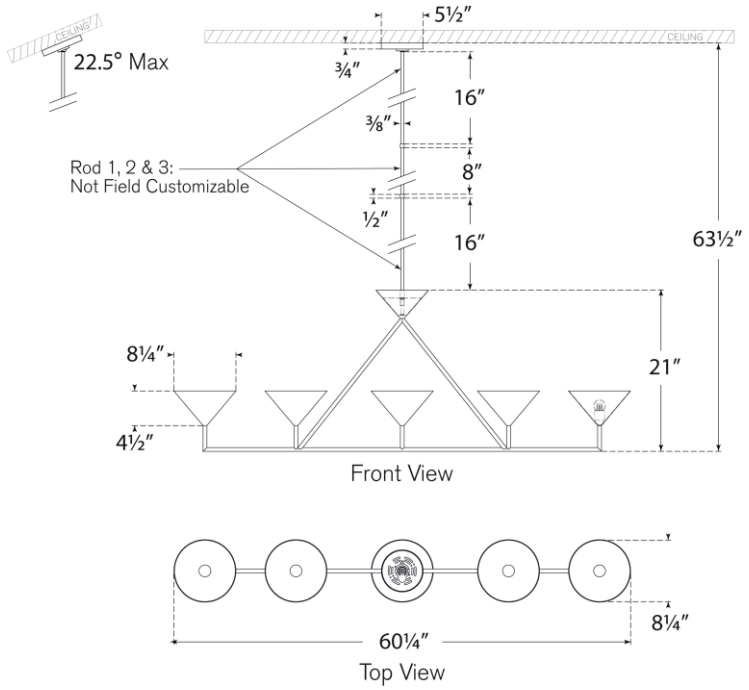

VISUAL COMFORT & CO.