TEAR SHEET



Orsay Grande Pendant

Item # PCD 5220BZ-WG

Designer: Paloma Contreras

O/A Height: 58.5"
Fixture Height: 17.25"
Min. Custom Height: 23.75"
Width: 30"
Canopy: 8.5" Round
Finishes: BZ, PN
Socket: E26 Keyless
Wattage: 15 LED A
Weight: 31 Pounds

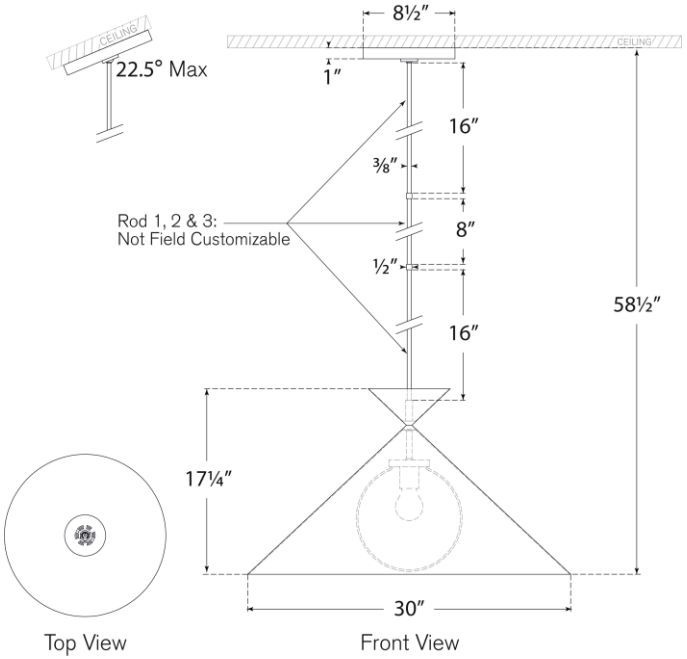

VISUAL COMFORT & CO.