TEAR SHEET



Zenz Medium Floor Lamp

Item # RB 1130PN/W-L

Designer: Ray Booth

Height: 58"
Width: 11.5"
Base: 10" x 11.5" Decorative
Finishes: PN/W, WI/DW
Shade Treatments: L
Shade Details: 10" x 10" x 16"
Socket: E26 Pull Chain
Wattage: 15 LED A19
Weight: 13 Pounds

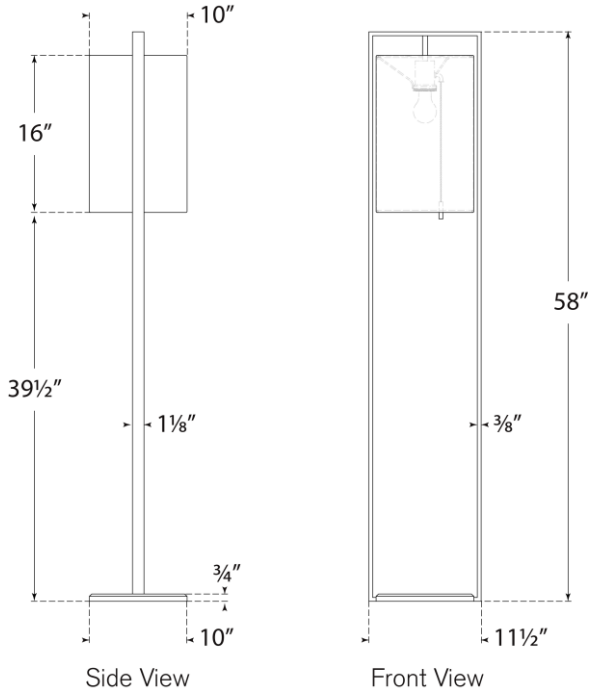

VISUAL COMFORT & CO.