TEAR SHEET

Beza Single Reflector Sconce

Item # RB 2005PN/MIR-CG

Designer: Ray Booth



Height: 16.25"
Width: 5.75"
Extension: 3.75"
Backplate: 5.75" x 10.5" Rectangle
Finishes: PN/MIR
Glass Options: CG
Socket: E12 Candelabra
Wattage: 2.5 LED T6
Weight: 7 Pounds

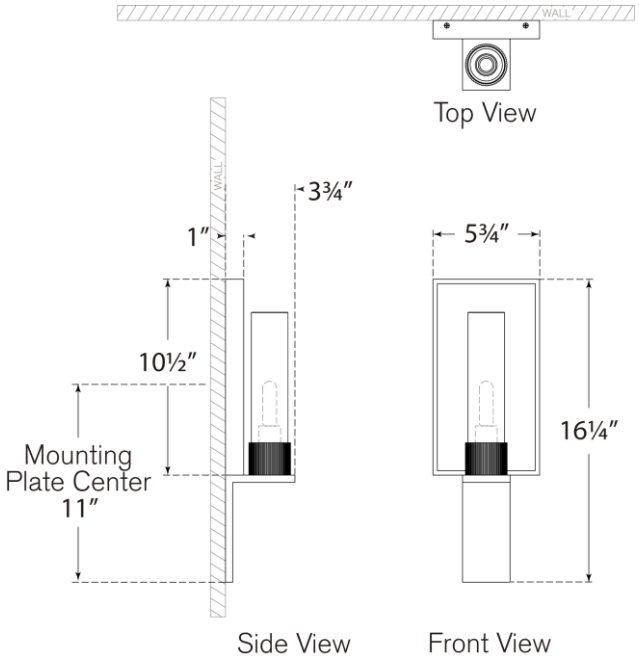

VISUAL COMFORT & CO.