TEAR SHEET



Beza Large Tail Sconce

Item # RB 2012AB-WG

Designer: Ray Booth

Height: 22.5"
Width: 5.25"
Extension: 6.5"
Backplate: 4.25" x 8" Rectangle
Finishes: PN, WI/AB
Glass Options: CG, WG
Socket: E26 Keyless
Wattage: 7 LED ST18
Weight: 6 Pounds

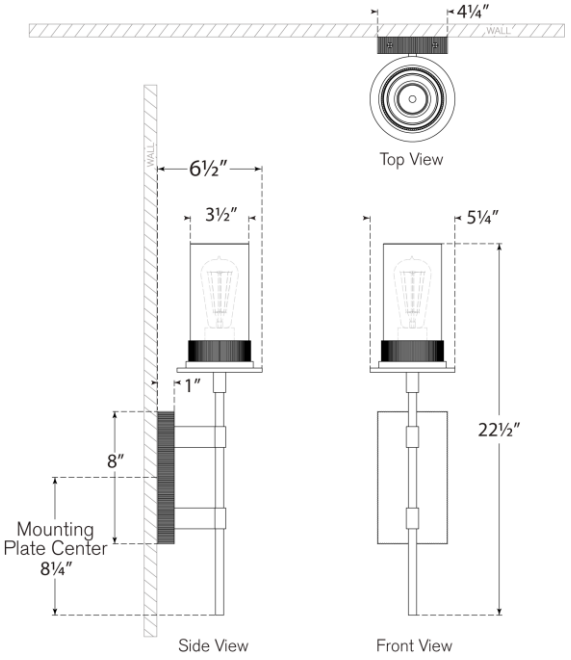

VISUAL COMFORT & CO.