TEAR SHEET

Eadan 26" Table Lamp

Item # RB 3041MBR-L

Designer: Ray Booth



Height: 26"
Width: 17.5"
Base: 5.75" Square
Finishes: MBR, PW, WI
Shade Treatments: L
Shade Details: 16" x 17.5" x 10.5"
Socket: E26 Dimmer
Wattage: 15 LED A19
Weight: 23 Pounds

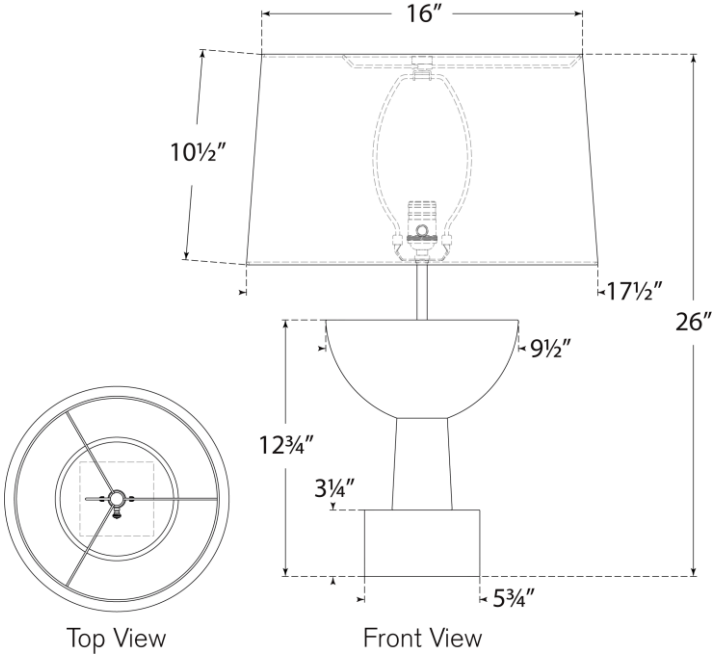

VISUAL COMFORT & CO.