TEAR SHEET



# Amaya 20" Table Lamp

Item # RB 3125WI/DW-L

Designer: Ray Booth

Height: 20"
Width: 13.75"
Base: 7.75" x 8.75" Triangle
Finishes: AB/W, PN/W, WI/DW
Shade Treatments: L
Shade Details: 3.75" x 13.75" x 8.25"
Socket: E26 Dimmer
Wattage: 6.5 LED B11
Weight: 4 Pounds

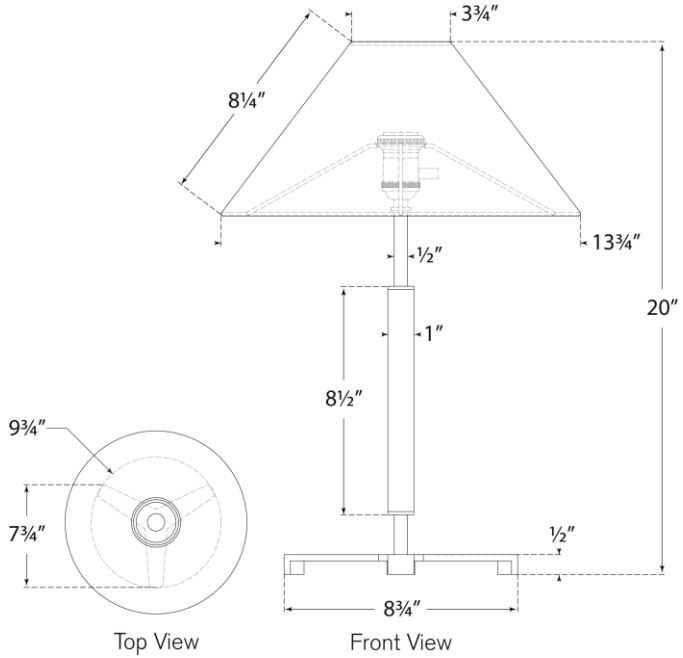


VISUAL COMFORT & CO.