TEAR SHEET

Zenz Medium Table Lamp

Item # RB 3130PN/W-L

Designer: Ray Booth



Height: 21"
Width: 11.5"
Base: 10" x 11.5" Decorative
Finishes: PN/W
Shade Treatments: L
Shade Details: 10" x 10" x 11.25"
Socket: E26 Pull Chain
Wattage: 15 LED A19
Weight: 8 Pounds

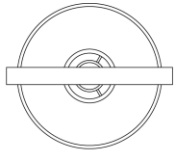

Top View

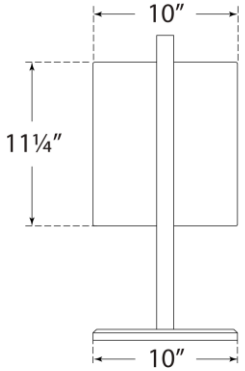

Side View

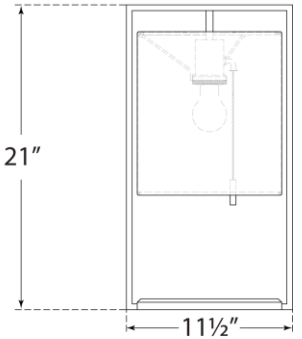

Front View

VISUAL COMFORT & CO.