TEAR SHEET



Single Swing Arm Sconce

Item # S 2005BZ-L2

Designer: Studio VC

Height: 12"
Width: 6"
Extension: 7"
Backplate: 3.5" x 4.5" Rectangle
Finishes: AN, BZ, HAB, PN
Shade Treatments: L, NP
Shade Details: 3" x 6" x 5"
Socket: E12 Candelabra
Wattage: 40 B11
Weight: 3 Pounds
Note: Requires Smaller Outlet Box

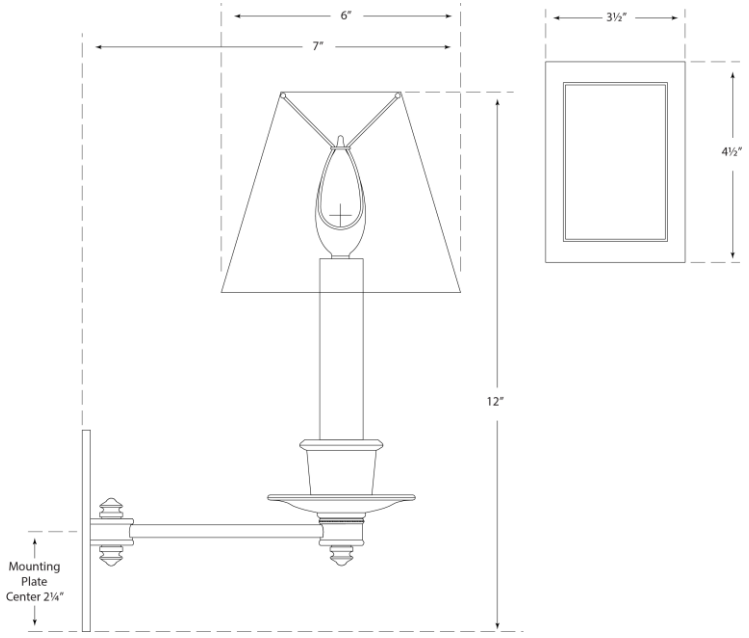

circa LIGHTING®

DRY