TEAR SHEET



Architectural Wall Sconce

Item # S 20PN-LS

Designer: Visual Comfort

Height: 12.75"
Width: 7"
Extension: 8.25"
Backplate: 4.25" Square
Finishes: BS, HAB, PN
Shade Treatments: L
Shade Details: 4" x 7" X 6.5" Square
Socket: E12 Candelabra
Wattage: 40 B11
Weight: 3 Pounds

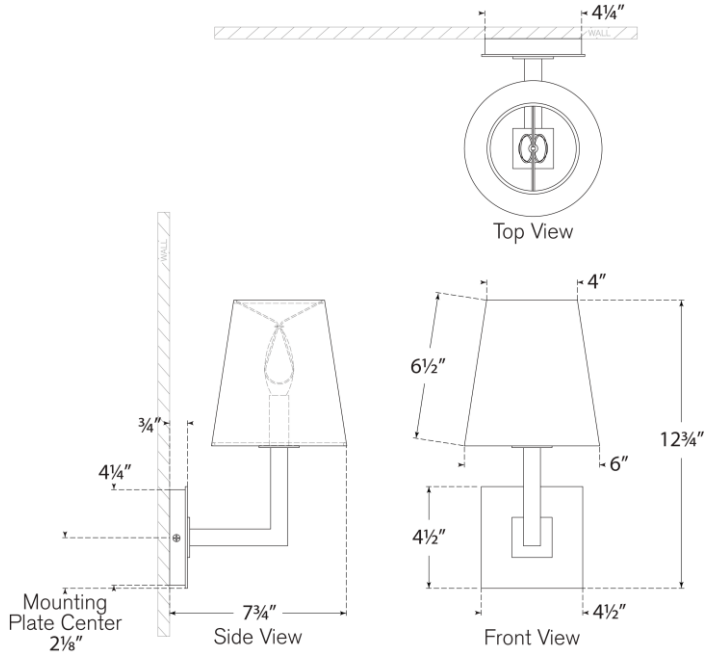

VISUAL COMFORT & CO.