TEAR SHEET

Presidio 14" Outdoor Sconce

Item # S 2168PN-CG

Designer: Ian K. Fowler

Height: 14"
Width: 4.75"
Extension: 4.5"
Backplate: 4.5" x 6" Rectangle
Finishes: BZ, PN
Glass Options: CG
Socket: E26 Keyless
Wattage: 8 LED T10
Weight: 5 Pounds
Note: Polished Nickel is not Intended for use Outdoors



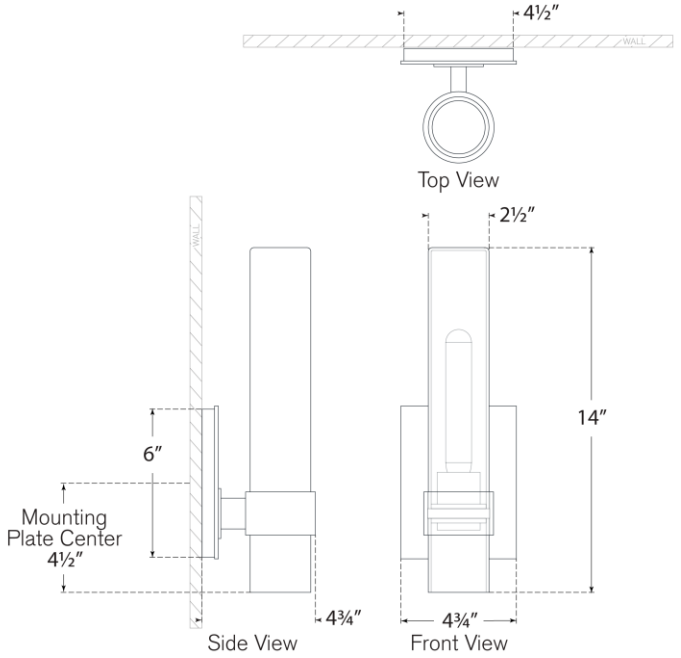

VISUAL COMFORT & CO.