TEAR SHEET

Halle Small Narrow Wall Lantern

Item # S 2195AI-CG

Designer: Ian K. Fowler



Height: 14"
Width: 5.75"
Extension: 5"
Backplate: 4.5" x 10.75" Rectangle
Finishes: AI
Glass Options: CG
Socket: E26 Keyless
Wattage: 8 LED T10
Weight: 5 Pounds

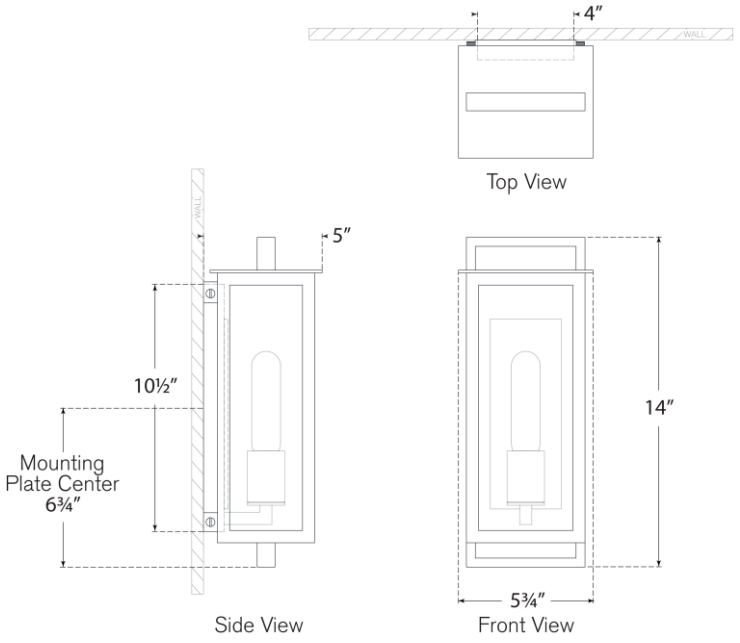

VISUAL COMFORT & CO.