TEAR SHEET



Kears Small Bracketed Wall Light

Item # S 2760AI-CG

Designer: Ian K. Fowler

Height: 16"
Width: 5"
Extension: 7.25"
Backplate: 4.5" x 7.5" Rectangle
Finishes: AI
Glass Options: CG
Socket: E26 Keyless
Wattage: 8 LED T10
Weight: 6 Pounds

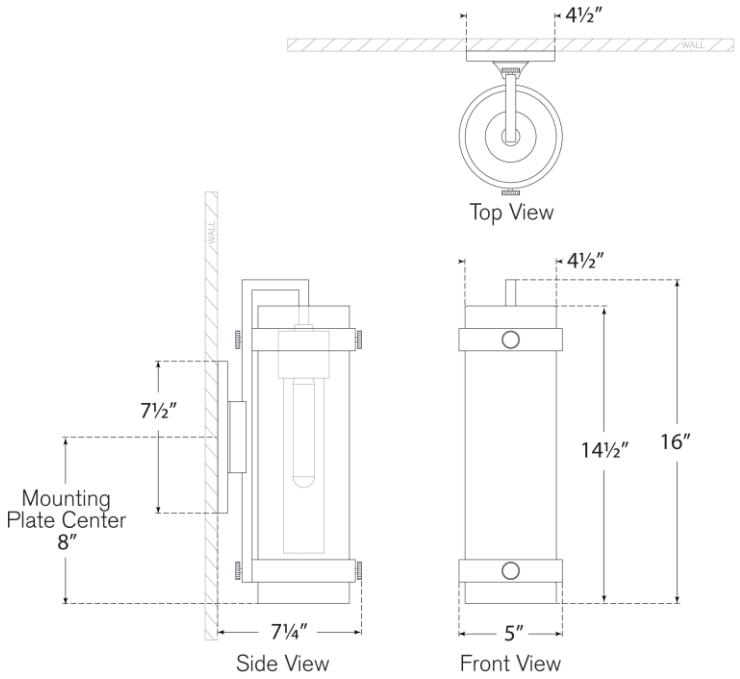

VISUAL COMFORT & CO.