TEAR SHEET



Serre Large Table Lamp
Item # S 3722AI-L

Designer: Ian K. Fowler

Height: 30"
Width: 18"
Base: 8" Square
Finishes: AI, PN
Shade Treatments: L
Shade Details: 18" x 18" x 10"
Socket: E26 Dimmer
Wattage: 15 LED A19
Weight: 18 Pounds

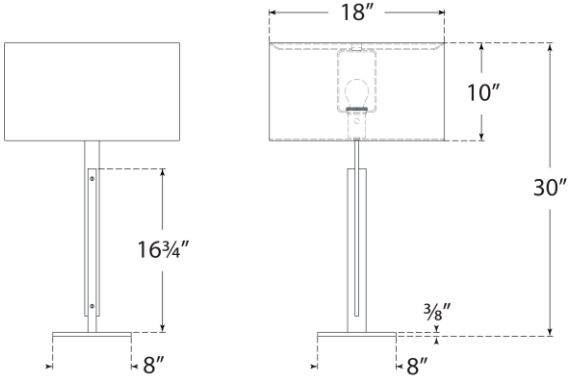

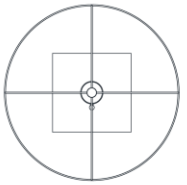

VISUAL COMFORT & CO.