TEAR SHEET

Callaway 18" Flush Mount

Item # S 4687BZ-L/FA

Designer: Carrier and Company



Height: 6.5"
Width: 17.25"
Canopy: 11" Round
Finishes: BZ, HAB, PN
Shade Treatments: L/FA
Lightsource: Dedicated LED
Wattage: 36w (4300lm)
Weight: 8 Pounds

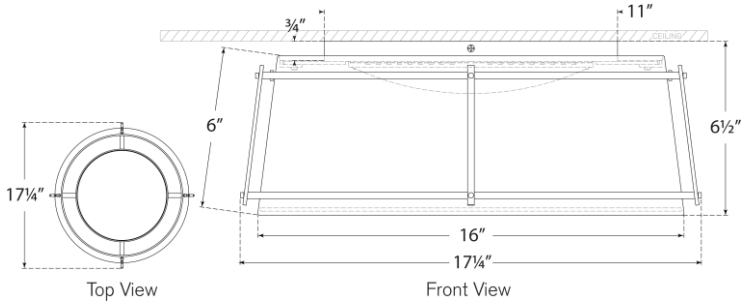

VISUAL COMFORT & CO.

DAMP LED 4