TEAR SHEET



Romero Medium Floor Lamp

Item # SCH 1020BZ-105

Designer: Schumacher

Height: 56.5"

Width: 18"

Base: 9.75" Round

Finishes: BZ, HAB, PN, PW

Shade Treatments: 105, 106, 107, 145, 146, 160, 161, 206, 207, 247, 248, 300, 301, 400, 401, 465, 46

Shade Details: 14.75" x 18" x 12.5"

Socket: E26 Dimmer

Wattage: 15 LED A19

Weight: 20 Pounds

Note: Print Placements for Each Shade will Vary

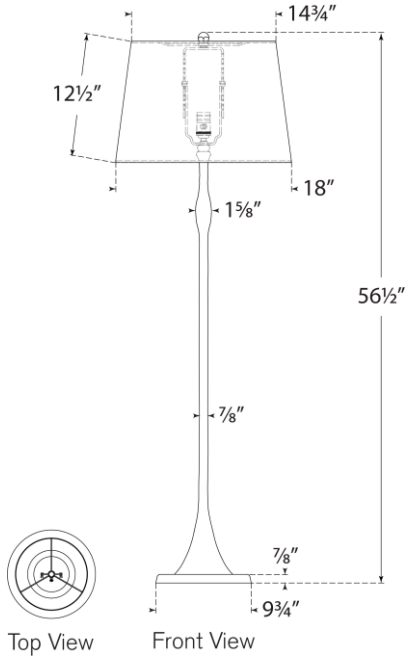

VISUAL COMFORT & CO.