TEAR SHEET



Zoran Medium Table Lamp

Item # SCH 3022BZ-105

Designer: Schumacher

Height: 30.5"

Width: 16"

Base: 4" Pentagon

Finishes: BZ, HAB, PN

Shade Treatments: 105, 106, 160, 161, 220, 221, 315, 316, 400, 401, 465, 466, 470, 471

Shade Details: 13" x 16" x 11"

Socket: E26 Dimmer

Wattage: 15 LED A19

Weight: 11 Pounds

Note: Print Placements for Each Shade will Vary

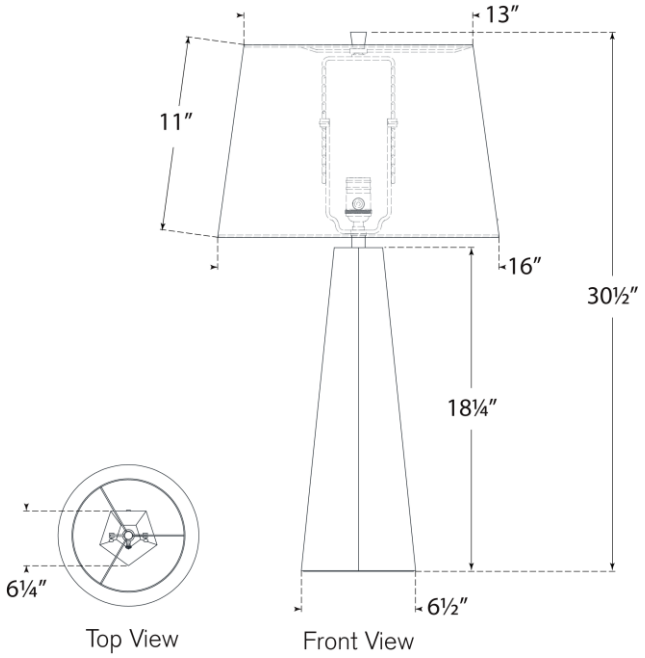

VISUAL COMFORT & CO.