TEAR SHEET



Evelyn 19" Hanging Shade

Item # SCH 5050BZ/NO-115

Designer: Schumacher

Height: 13.5"

Width: 19"

Canopy: 5.75" Round

Finishes: BZ/NO, BZ/WO, HAB/NO, HAB/WO, PN/NO, PN/WO

Shade Treatments: 115, 145, 247, 260, 400, 405, 452, 470

Shade Details: 18" x 19" x 12"

Socket: E26 Keyless

Wattage: 15 LED A19

Weight: 9 Pounds

Note: Print Placements for Each Shade will Vary | Item Includes 3 ft. c
Chain

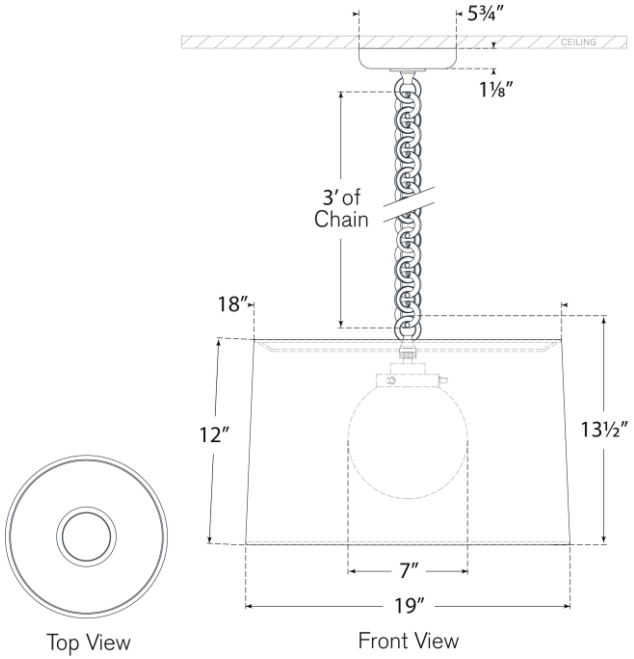

VISUAL COMFORT & CO.