TEAR SHEET



Caufield 21" Hanging Shade

Item # SCH 5070BZ-145

Designer: Schumacher

O/A Height: 30" - 238"

Fixture Height: 9.75"

Width: 21"

Canopy: 5" Round

Finishes: BZ, HAB, PN, WHT

Shade Treatments: 145, 247, 260, 300, 400, 465, 470

Shade Details: 15" x 21" x 10.5"

Lightsource: Dedicated LED

Wattage: 25w (2100lm)

Weight: 10 Pounds

Note: Print Placements for Each Shade will Vary | Height Not Adjustable After Installation

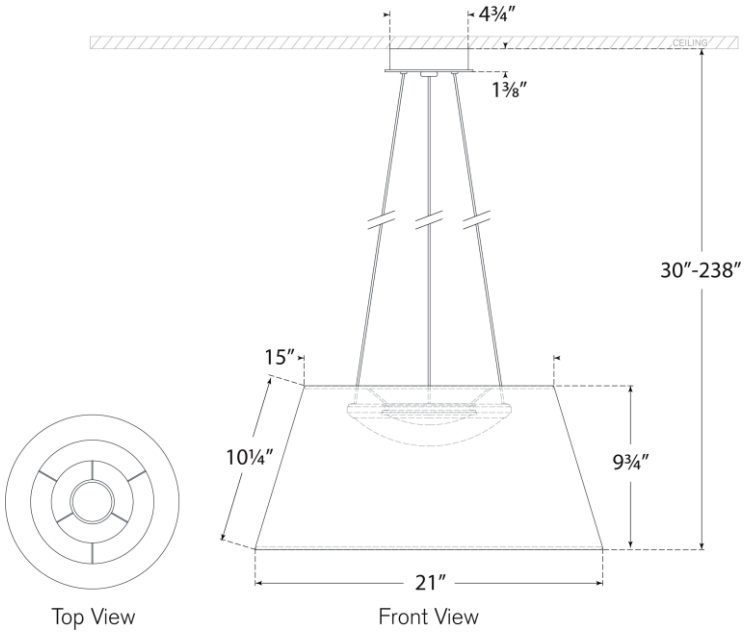

VISUAL COMFORT & CO.

DAMP LED 4