TEAR SHEET

Adley Adjustable Pharmacy Floor Lamp

Item # SK 1120BZ

Designer: Suzanne Kasler

Height: 34" - 45"
Width: 6.5"
Extension: 16.5"
Base: 6.5" Square
Finishes: BZ, HAB
Socket: E26 Dimmer
Wattage: 6.5 LED B11
Weight: 21.6 Pounds



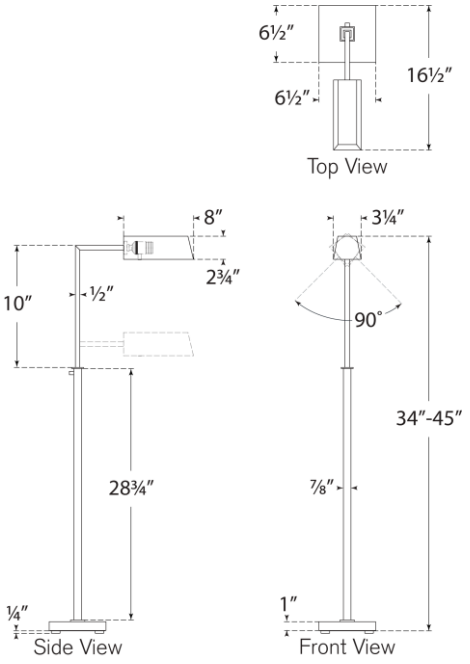

VISUAL COMFORT & CO.