TEAR SHEET



Collette 23" Tail Sconce

Item # SK 2705PN-L

Designer: Suzanne Kasler

Height: 23"
Width: 8"
Extension: 9.75"
Backplate: 5" Round
Finishes: AI, GI, PN
Shade Treatments: L
Shade Details: 6.5" x 8" x 7.5"
Socket: E26 Keyless
Wattage: 15 LED A19
Weight: 3 Pounds

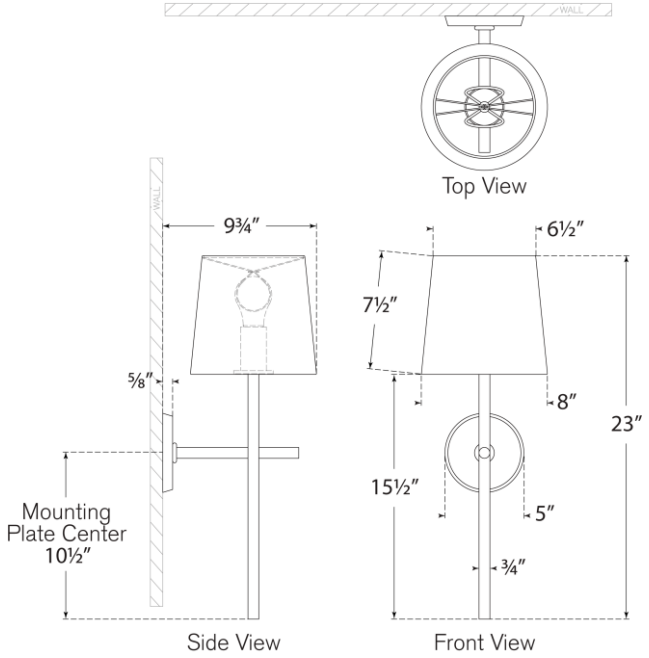

VISUAL COMFORT & CO.

DAMP LED 4