TEAR SHEET



Wyatt 29" Buffet Lamp

Item # SK 3006PN-L

Designer: Suzanne Kasler

Height: 29"
Width: 10.5"
Base: 5.25" Round
Finishes: BZ, HAB, PN
Shade Treatments: L
Shade Details: 7" x 10.5" x 8.5"
Socket: E26 Dimmer
Wattage: 15 LED A19
Weight: 5 Pounds

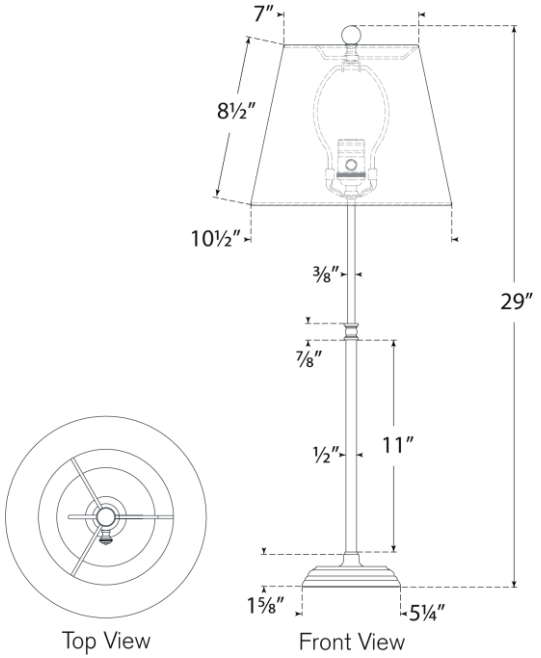

VISUAL COMFORT & CO.