TEAR SHEET



Reine Large Pendant

Item # SK 5558HAB-DRT

Designer: Suzanne Kasler

O/A Height: 19" - 134"
Fixture Height: 13"
Width: 18.75"
Canopy: 5" Round
Finishes: HAB, PN/BRT
Shade Treatments: N/A, DRT
Socket: E26 Keyless
Wattage: 15 LED A19
Weight: 9 Pounds
Note: Height Not Adjustable After Installation

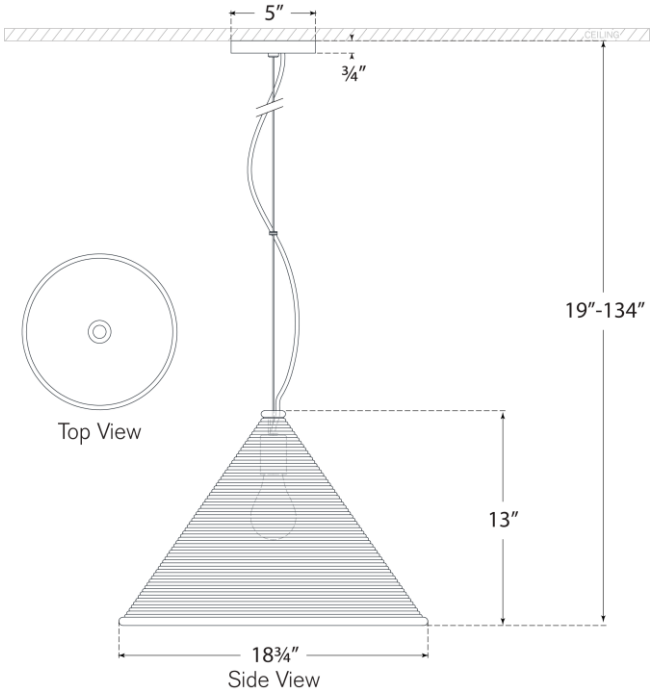

VISUAL COMFORT & CO.