TEAR SHEET

Yoke Suspended Sconce

Item # SL 2975AN-WG



Designer: Chapman & Myers

Height: 10.25"
Width: 5"
Extension: 9.5"
Backplate: 4.5" Round
Finishes: BZ, PN
Shade Treatments: HAB, PN
Socket: E26 Keyless
Wattage: 60 A19
Weight: 5 Pounds
Note: Shade Interior is White

©EFC DESIGNS

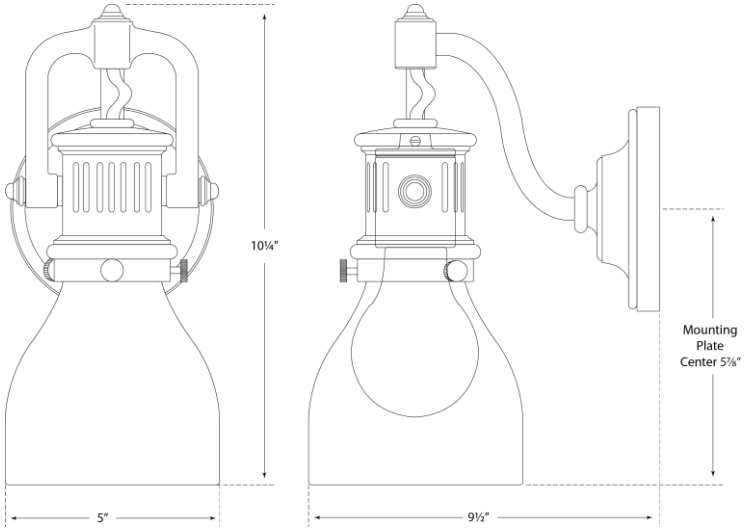

VISUAL COMFORT & CO.

DRY

4