TEAR SHEET

1969 26" Oval Form Table Lamp

Item # SL 3601SGR-L



Designer: Sean Lavin

Height: 26"
Width: 23"
Base: 8" x 12.5" Oval
Finishes: SGR
Shade Treatments: L
Shade Details: 21.5" x 23" x 12"
Lightsource: Dedicated LED w/ Touch Dimmer at Back of Body
Wattage: 9w (270 - 1000lm)
Weight: 31 Pounds
Note: Ceramic Glazes Will Vary in Color and Texture

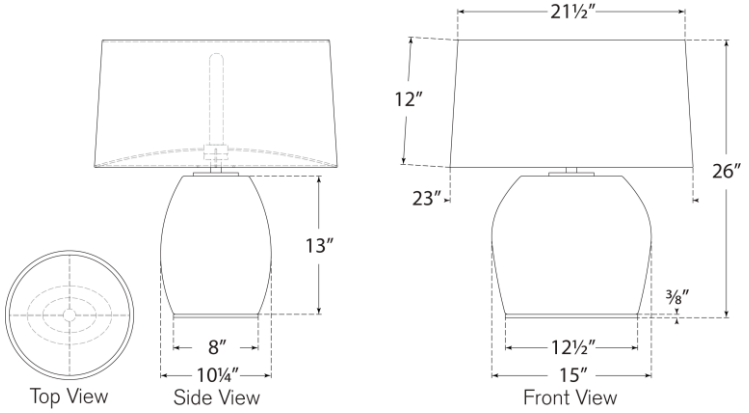

VISUAL COMFORT & CO.