TEAR SHEET

1953 26" Geometric Form Table Lamp

Item # SL 3603SGR-L

Designer: Sean Lavin



Height: 25.5"
Width: 17.5"
Base: 9" Round
Finishes: SGR
Shade Treatments: L
Shade Details: 13" x 17.5" x 12"
Lightsource: Dedicated LED w/ Touch Dimmer at Back of Body
Wattage: 9w (270 - 1000lm)
Weight: 25 Pounds
Note: Ceramic Glazes Will Vary in Color and Texture

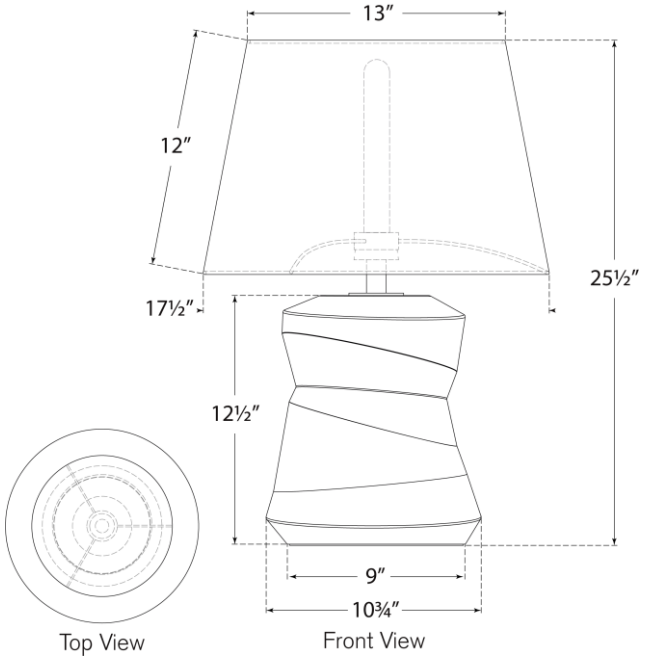

VISUAL COMFORT & CO.