TEAR SHEET

Hackney 25" Tail Sconce

Item # SP 2024BZ-L



Designer: J. Randall Powers

Height: 25"
Width: 10.75"
Extension: 11"
Backplate: 4.75" Round
Finishes: BZ, HAB, PN
Shade Treatments: L
Shade Details: 3.25" x 10.75" x 5.75"
Socket: E12 Candelabra
Wattage: 5 LED B11
Weight: 4 Pounds

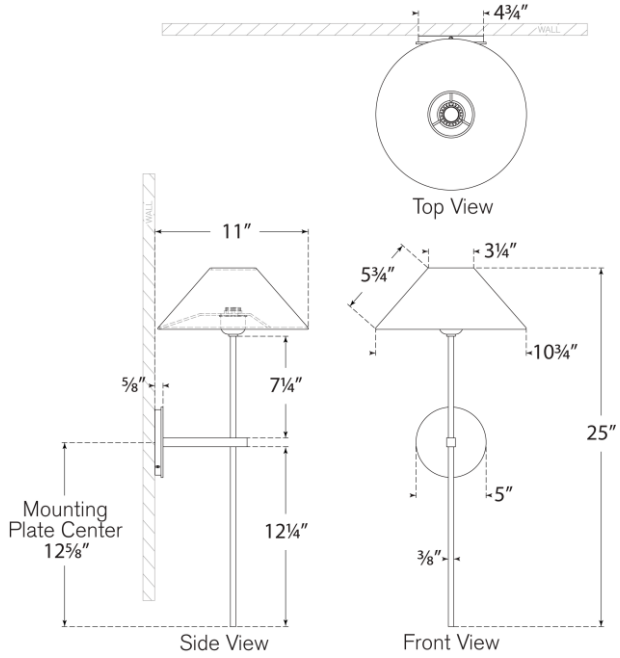

VISUAL COMFORT & CO.

DAMP
LED
4