TEAR SHEET



Greggory Small Lantern
Item # SP 5001BZ

Designer: J. Randall Powers

Height: 19"
Width: 12"
Canopy: 5.75" Round
Finishes: BZ, HAB, PN
Glass Options: CG
Socket: 4 - E12 Candelabra
Wattage: 4 - 60 C11
Weight: 19 Pounds

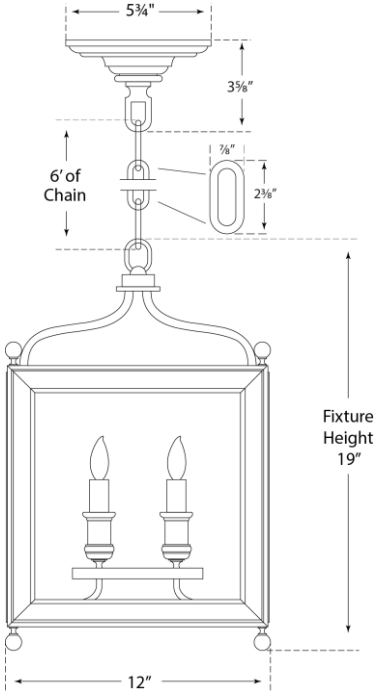

VISUAL COMFORT & CO.