TEAR SHEET



Alpha Single Sconce

Item # TOB 2510PN

Designer: Thomas O'Brien

Height: 10.5"
Width: 5"
Extension: 4.5"
Backplate: 4.75" Round
Finishes: PN
Shade Treatments: N/A, L
Socket: E12 Candelabra
Wattage: 40 B11
Weight: 2 Pounds

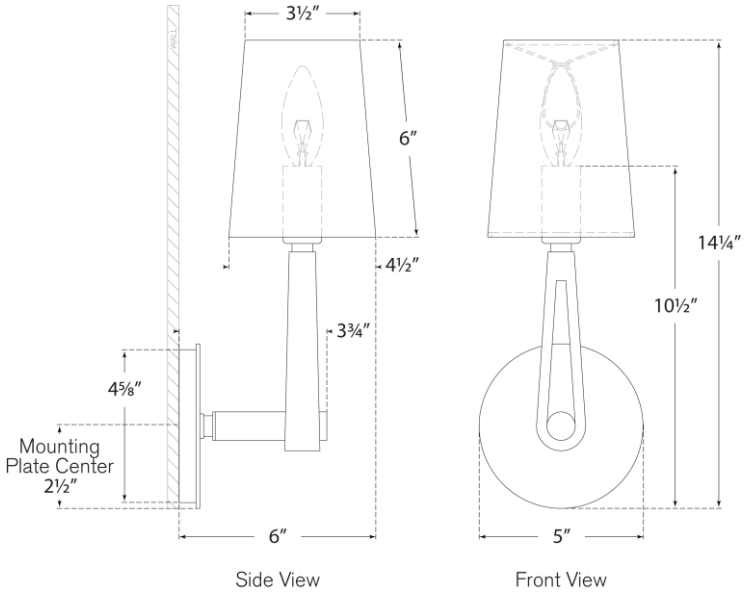

VISUAL COMFORT & CO.