TEAR SHEET



Oso 25" Arc Table Lamp

Item # TOB 3130MI/HAB-MI

Designer: Thomas O'Brien

Height: 25.25"
Width: 9"
Extension: 25"
Base: 8.75" Round
Finishes: MI/HAB, PN
Shade Treatments: BLK, MI, WHT
Lightsource: Dedicated LED w/ Touch Dimmer
Wattage: 6w (800lm)
Weight: 23 Pounds
Note: 120V Configuration Only

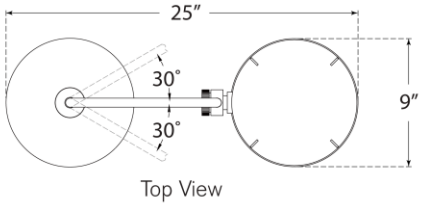

Top View

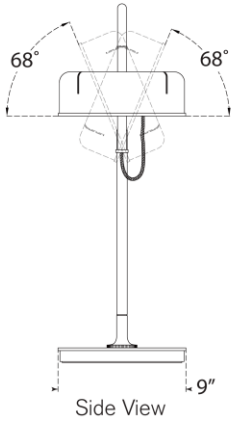

Side View

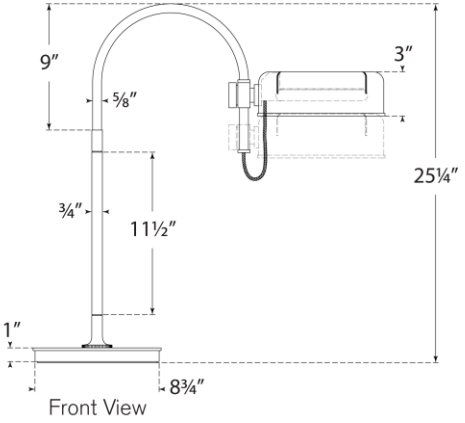

Front View

VISUAL COMFORT & CO.