TEAR SHEET



Biarritz Medium Table Lamp
Item # TOB 3524GBZ-L

Designer: Thomas O'Brien

Height: 29"
Width: 15"
Base: 3.75" Round
Finishes: GBZ, PW
Shade Treatments: L
Shade Details: 13" x 15" x 11.5"
Socket: E26 Dimmer
Wattage: 15 LED A19
Weight: 10 Pounds

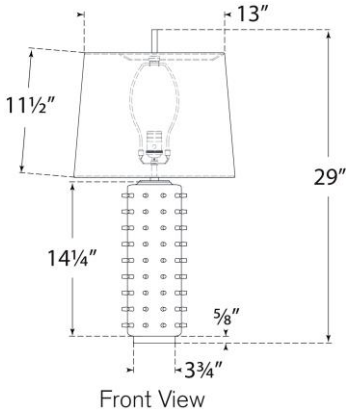

Front View

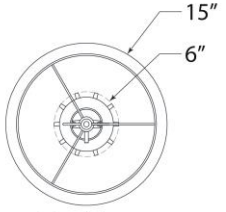

Top View

VISUAL COMFORT & CO.