TEAR SHEET

Monique 20" Table Lamp

Item # TOB 3617POS-L



Designer: Thomas O'Brien

Height: 19.75"

Width: 12"

Base: 3.75" x 7.25" Rectangle

Finishes: POS, SKB, SKG, VNW

Shade Treatments: L

Shade Details: 10.5" x 12" x 8.5"

Socket: E26 Dimmer

Wattage: 15 LED A19

Weight: 10 Pounds

Note: 120V Configuration Only | Reactive Ceramic Glazes Will Vary ir Color and Texture

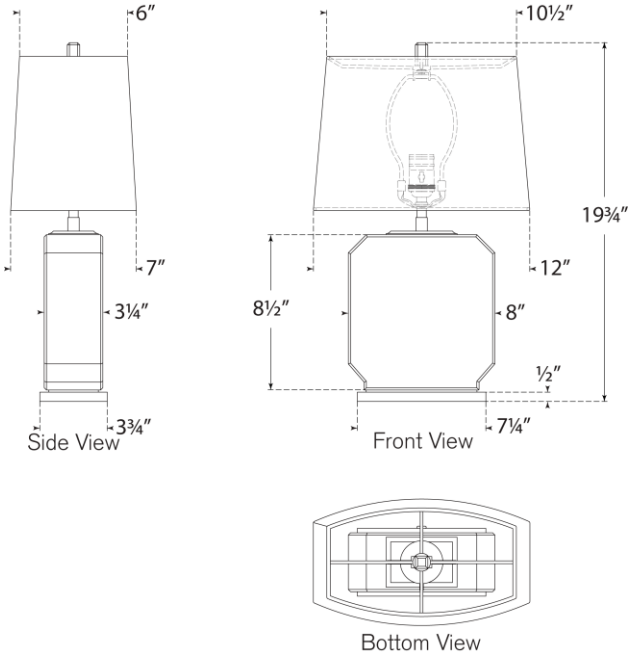

VISUAL COMFORT & CO.