TEAR SHEET



Calix Tall Flush

Item # TOB 4275BZ/HAB-CG

Designer: Thomas O'Brien

Height: 11.5"
Width: 5.25"
Canopy: 5.75" Round
Finishes: BZ/HAB, HAB, PN
Glass Options: CG, WG
Socket: E12 Candelabra
Wattage: 60 C11
Weight: 4 Pounds

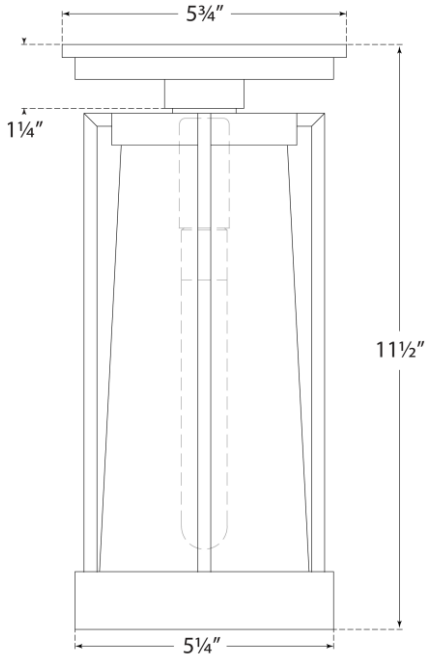

Front View

VISUAL COMFORT & CO.

DAMP 4