TEAR SHEET

Rally 9" Flush Mount

Item # TOB 4525BZ/HAB-WG



Designer: Thomas O'Brien

Height: 7"
Width: 8.75"
Canopy: 7.25" Round
Finishes: BZ, BZ/HAB, HAB, PN
Glass Options: WG
Socket: E26 Keyless
Wattage: 15 LED A19
Weight: 6 Pounds
Note: 120V Configuration Only

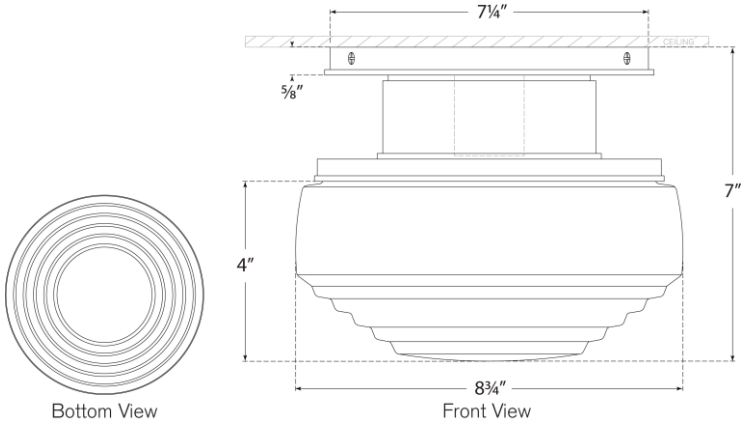

VISUAL COMFORT & CO.