TEAR SHEET



Bryant Medium Billiard

Item # TOB 5047AN-L

Designer: Thomas O'Brien

O/A Height: 54"
Fixture Height: 10.75"
Min. Custom Height: 17.25"
Width: 12" x 48"
Canopy: 4.5" x 36" Rectangle
Finishes: AN, BZ, BZ/HAB, PN
Shade Treatments: L
Shade Details: 10.5" x 12" x 7.5"
Socket: 2 - E26 Keyless
Wattage: 2 - 15 LED A19
Weight: 15 Pounds

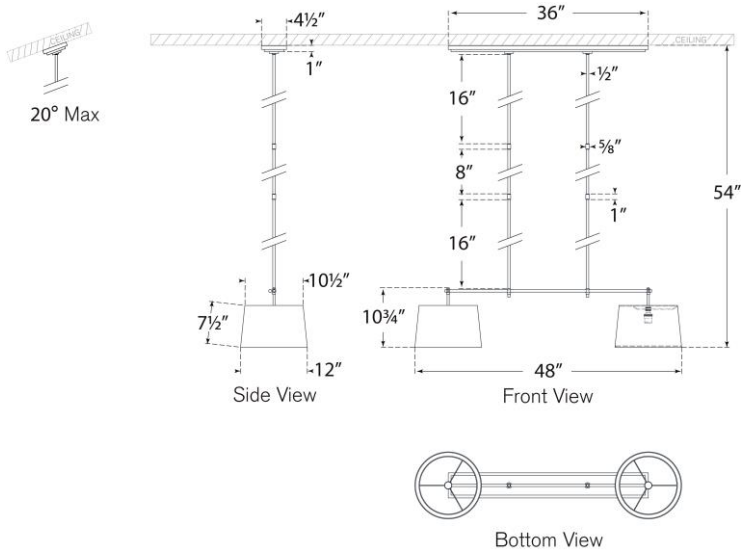

VISUAL COMFORT & CO.