TEAR SHEET



Calix Small Pendant

Item # TOB 5275HAB-CG

Designer: Thomas O'Brien

O/A Height: 56.75"
Fixture Height: 21.25"
Min. Custom Height: 27"
Width: 5.75"
Canopy: 5.5" Round
Finishes: HAB, PN
Glass Options: CG, WG
Socket: E26 Keyless
Wattage: 60 T10
Weight: 10 Pounds
Note: Custom Height Available

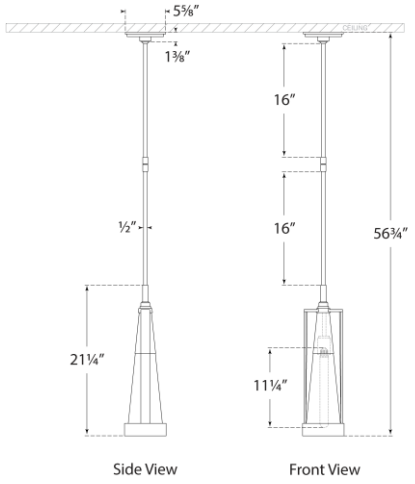

VISUAL COMFORT & CO.

DAMP

4