TEAR SHEET



Truesdell 24" Pendant

Item # TOB 5492BZ-HAB

Designer: Thomas O'Brien

O/A Height: 52.25"
Fixture Height: 6.25"
Min. Custom Height: 13.25"
Width: 24"
Canopy: 5.25" Round
Finishes: BZ, HAB, HAB/BZ, WHT
Shade Treatments: HAB, WHT
Lightsource: Dedicated LED
Wattage: 9w (1000lm)
Weight: 12 Pounds
Note: Custom Height Available

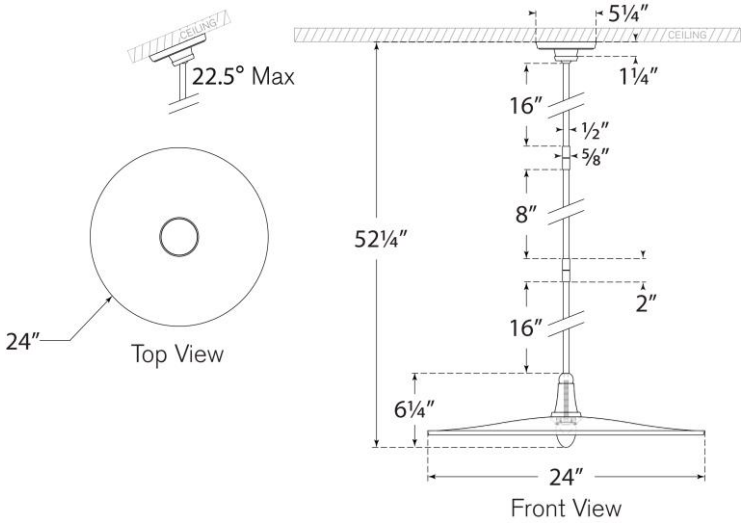

VISUAL COMFORT & CO.

DAMP LED 4