TEAR SHEET



Jeffery Medium Ring Chandelier

Item # TOB 5775PN-WG

Designer: Thomas O'Brien

Height: 24.5"
Width: 30"
Canopy: 4.5" Round
Finishes: BZ, HAB, PN
Glass Options: WG
Lightsource: Dedicated LED
Wattage: 35w (2800lm)
Weight: 24 Pounds

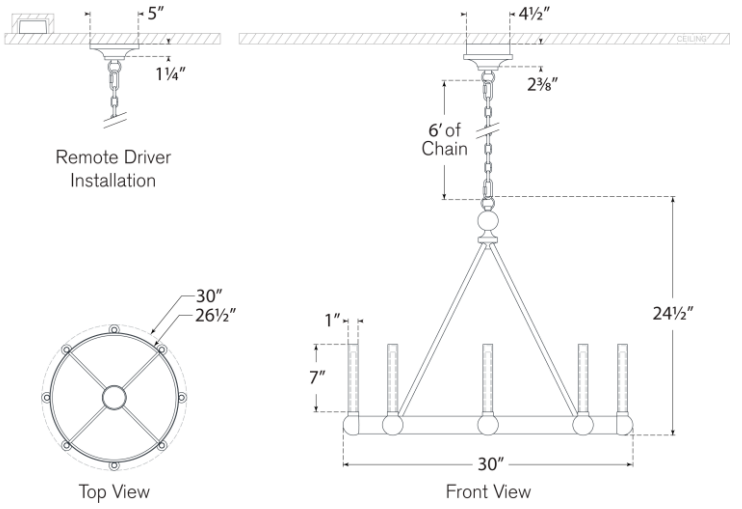

VISUAL COMFORT & CO.