TEAR SHEET

Academy 12.5" Conical Savannah Pendant

Item # TOB 5819SC-SC

Designer: Thomas O'Brien

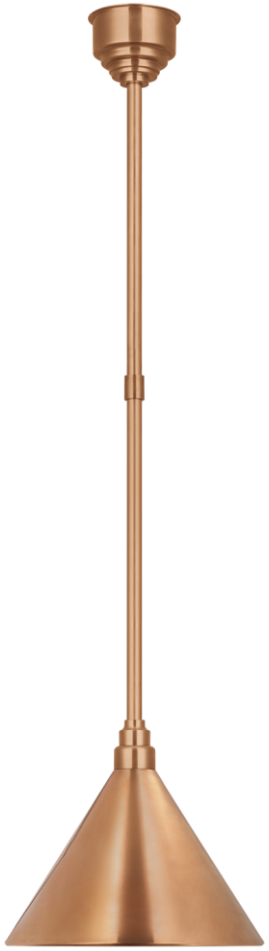

O/A Height: 56.75"
Fixture Height: 10.75"
Min. Custom Height: 22.75"
Width: 12.5"
Canopy: 4.5" Round
Finishes: HAB, MBK, SC
Shade Treatments: G, HAB, MBK, SC, WHT
Shade Details: 12.5"
Socket: E26 Keyless
Wattage: 15 LED A19
Weight: 7 Pounds

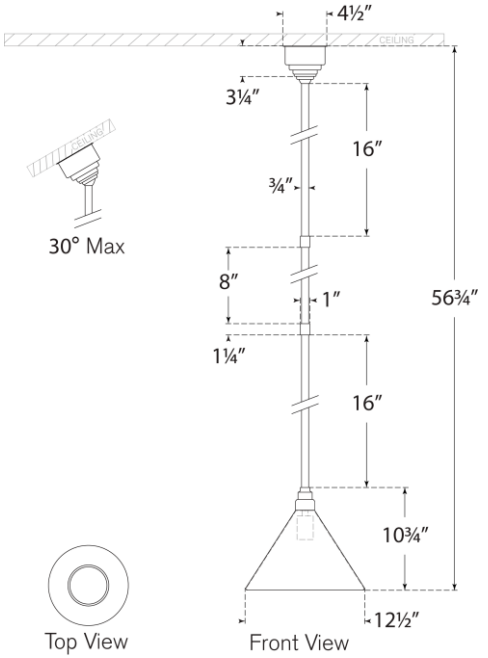

VISUAL COMFORT & CO.

DAMP LED 4